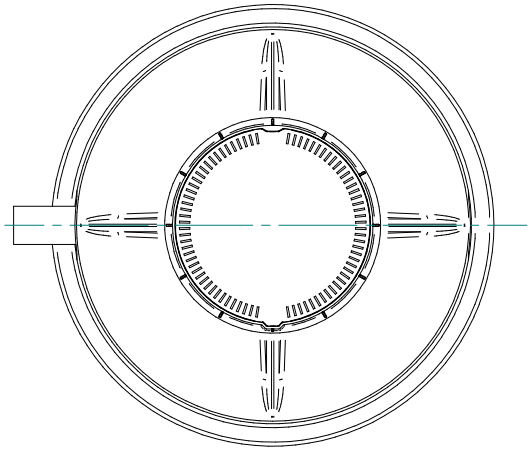

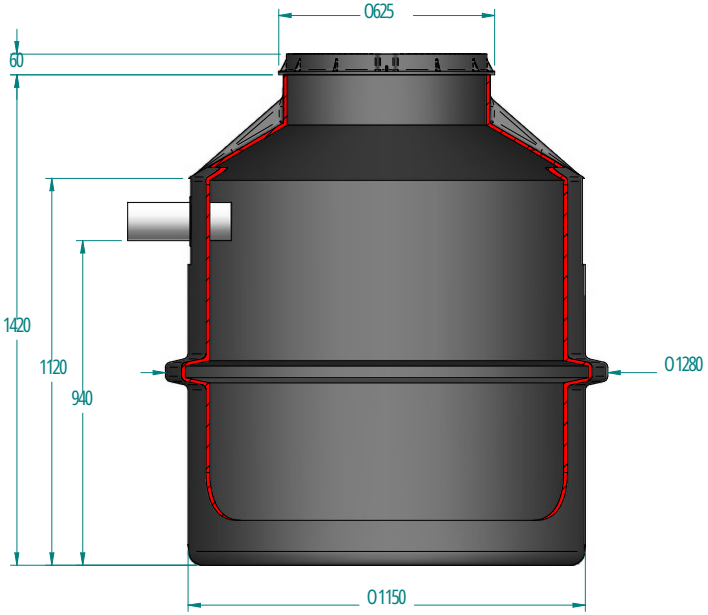

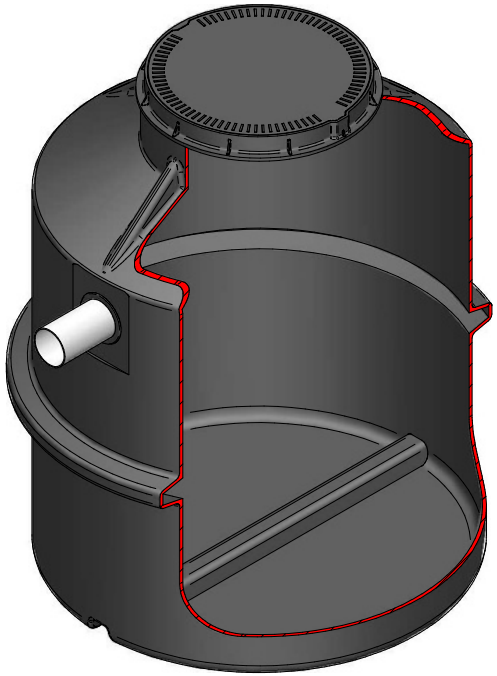

NOTES:

1. SEPTIC TANKS TO BE MANUFACTURED AND TESTED IN ACCORDANCE WITH AS/NZS 1546.1:2008

Econocycle AERATED WASTEWATER TREATMENT SYSTEMS	UNLESS OTHERWISE SPECIFIED ALL DIMENSIONS ARE IN MM	PROJECT 1000 PUMPWELL 1000 PUMPWELL	
		TITLE NSW HEALTH CERTIFICATION DRAWING	SHEET SIZE A3
COPYRIGHT WITH THIS DRAWING IS COPYRIGHT AND IS DESIGNED ECONOCYCLE AND CANNOT BE COPIED OR REPRODUCED WITHOUT WRITTEN PERMISSION	SCALE DO NOT SCALE	DATE PLOTTED 14/12/2010	COAT./TREAT. -
	DRAWN BY P MCKAY	DRAWING LAST MODIFIED BY P MCKAY	PART# 124_0140A2
	MODELLED BY P MCKAY	MODEL LAST MODIFIED BY P MCKAY	REVISION SHEET No. 1 OF 1